Amplificador Sintonizado

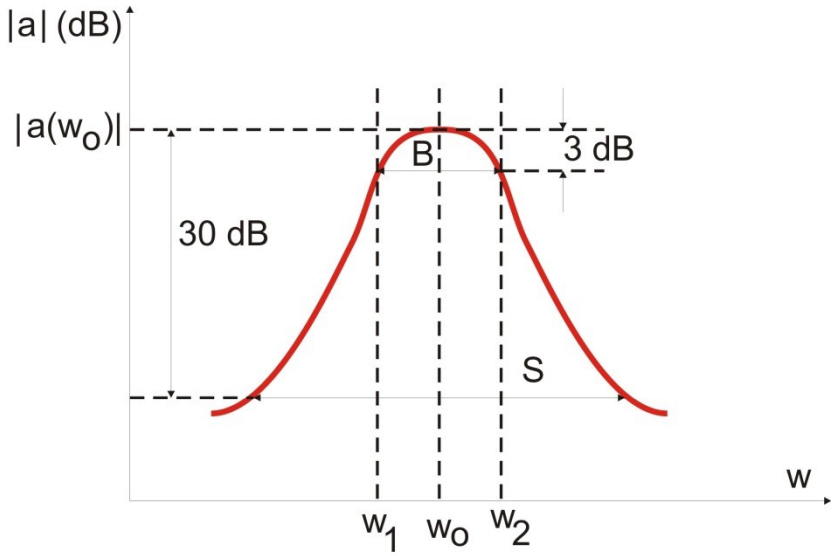

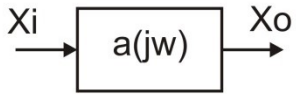

Ancho de Banda 3dB

$$B = w_2 - w_1$$

$$a(jw) = \frac{Xo}{Xi}$$

$$\text{Selectividad} = \frac{S}{B}$$

Sintonía Simple

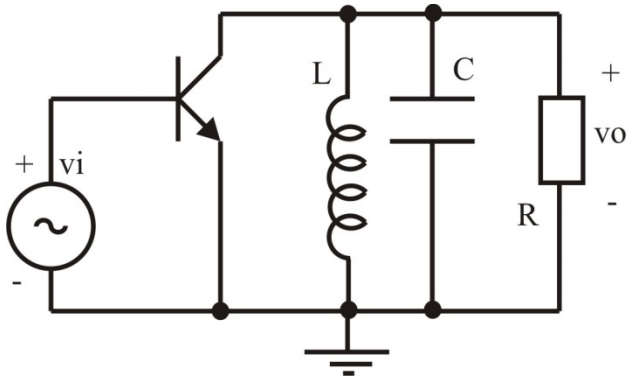

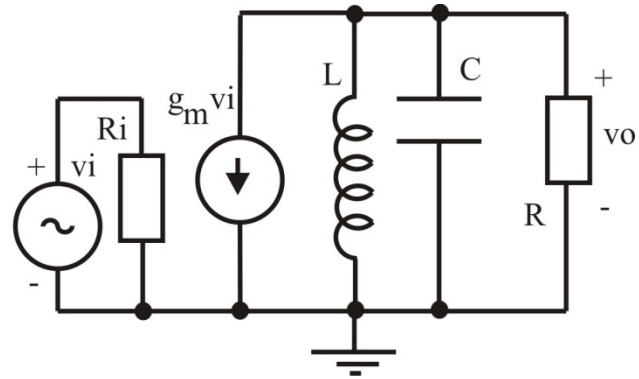

$$w_0 = \frac{1}{\sqrt{LC}} \quad ; \quad Q_0 = \frac{R}{w_0 L} = w_0 RC$$

$$a(jw) = \frac{v_0}{v_i}(jw) = -g_m \frac{1}{\frac{1}{R} + \frac{1}{jwL} + jwC} \quad ; \quad a(jw_0) = -g_m R$$

$$\boxed{a(jw) = \frac{-g_m R}{1 + jQ_0\left(\frac{w}{w_0} - \frac{w_0}{w}\right)}}$$

Sintonía Simple

Ancho de banda B de 3dB

$$\left|a(jw_{1,2})\right| = \frac{g_m R}{\sqrt{2}} = \frac{g_m R}{\sqrt{1 + {Q_0}^2\left(\frac{w}{w_0} - \frac{w_0}{w}\right)^2}}$$

$$w_2 = \frac{w_0}{2Q_0}\left(1 + \sqrt{1 + 4{Q_0}^2}\right) \qquad ; w_1 = \frac{w_0}{2Q_0}\left(-1 + \sqrt{1 + 4{Q_0}^2}\right)$$

$$\boxed{B = w_2 - w_1 = \frac{w_0}{Q_0}} \qquad y \qquad \boxed{w_0 = \sqrt{w_2 w_1}}$$

Sintonía Simple

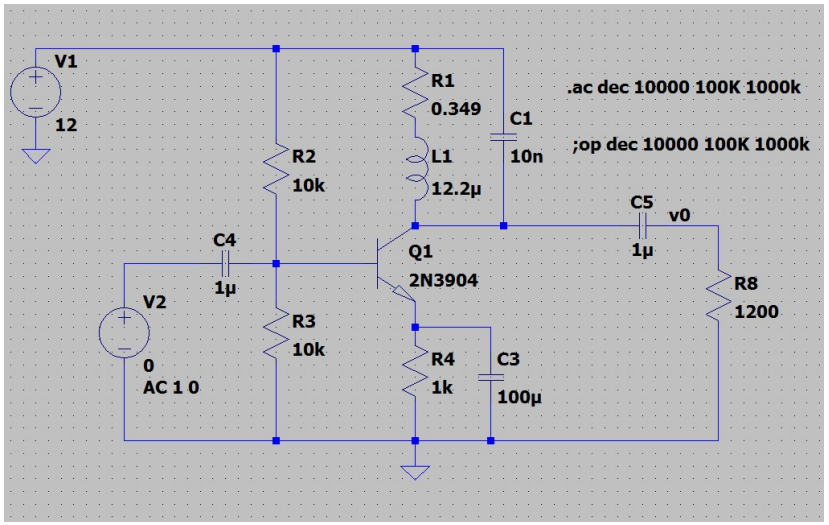

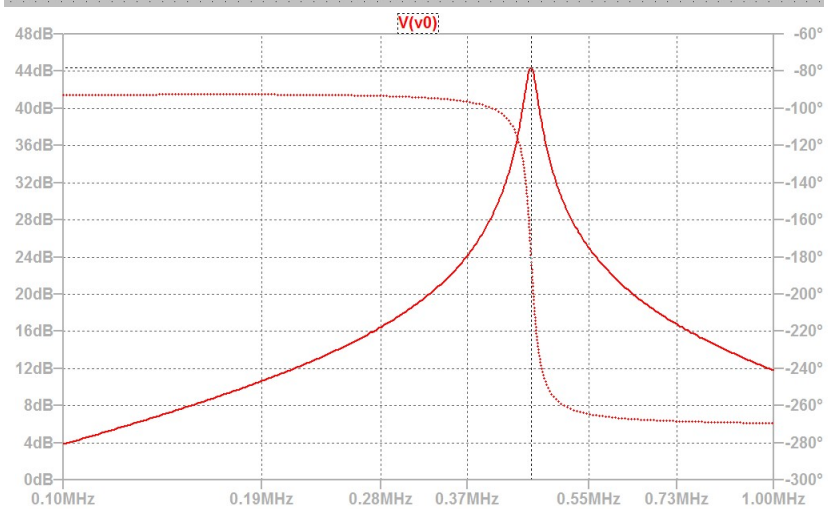

Simulación:

$$g_m = 0{,}2S;\ \ r_\pi = 1550\Omega;\ R_0 = 20{,}3K$$
$$I_{CQ} = 5{,}2mA; V_{CEQ} = 6{,}78V$$

$$f_0 = 455{,}51KHz;\ a(jf_0) = 44{,}37dB\ (165{,}4)$$

$$B_f = f_2 - f_1 = 18{,}5KHz$$

Cálculo:

$$f_0 = \frac{1}{2\pi\sqrt{L_1C_1}} = 455{,}7KHz \qquad Q_{L1} = 100$$
$$R_{pL1} = R_1(1 + 100^2) = 3490\Omega$$
$$R_T = R_{pL1}||R_0||R_8 = 855{,}3\Omega$$
$$g_mR_T = 171{,}1 \quad Q_0 = 24{,}5 \quad B_f = \frac{f_0}{Q_0} = 18{,}6KHz$$

Inductores

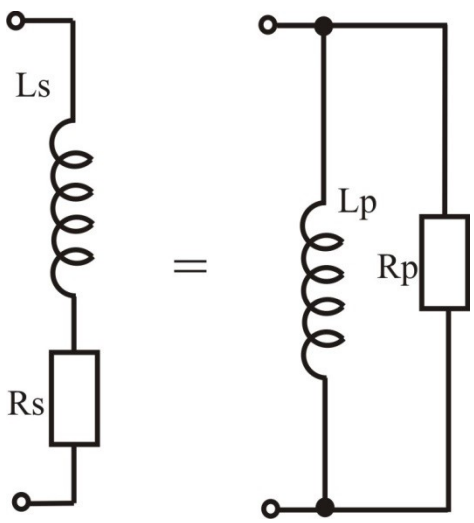

$$Q_s = \frac{w_0 L_s}{R_s} = Q_p = \frac{R_p}{w_0 L_p} = Q$$

$$\frac{1}{R_s + jw_0 L_s} = \frac{R_s - jw_0 L_s}{{R_s}^2 + (w_0 L_s)^2} = \frac{1}{R_s(1+Q^2)} + \frac{1}{jw_0 L_s\left(1+\frac{1}{Q^2}\right)}$$

$$= \frac{1}{R_p} + \frac{1}{jw_0 L_p}$$

$$R_p = R_s(1+Q^2) \;\; y \;\; L_p = L_s\left(1+\frac{1}{Q^2}\right) \quad si \;\; Q^2 \gg 1 \;\rightarrow\; R_p \cong w_0 L_s Q \;\; y \;\; L_p \cong L_s$$

Transformadores

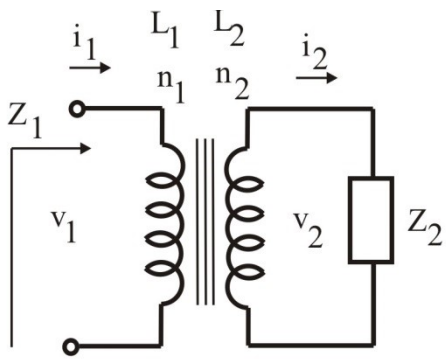

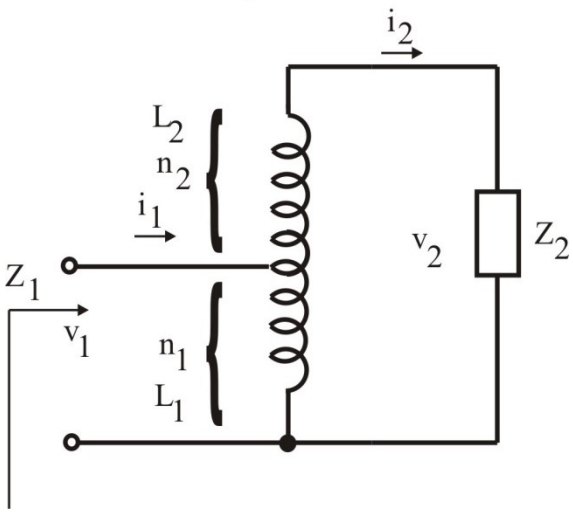

Transformador:

$$\left|\frac{v_2}{v_1}\right| = \left|\frac{i_1}{i_2}\right| = \frac{n_2}{n_1} = \sqrt{\frac{L_2}{L_1}}$$

$$Z_1 = \frac{v_1}{i_1} = Z_2\left(\frac{n_1}{n_2}\right)^2$$

Autotransformador:

$$\left|\frac{v_2}{v_1}\right| = \left|\frac{i_1}{i_2}\right| = \frac{n_2 + n_1}{n_1} = \sqrt{\frac{L_2 + L_1}{L_1}}$$

$$Z_1 = \frac{v_1}{i_1} = Z_2\left(\frac{n_1}{n_2 + n_1}\right)^2$$

Uso de Transformadores

Entrada

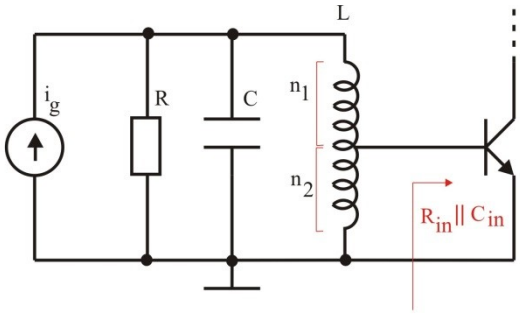

Salida

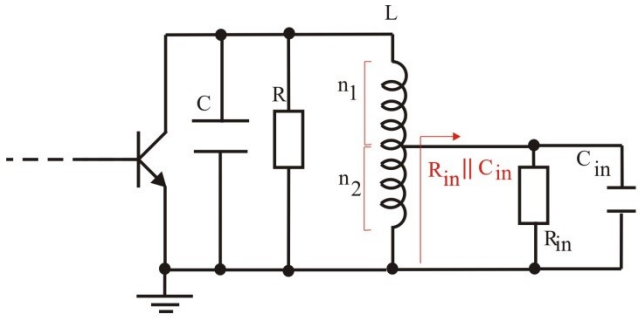

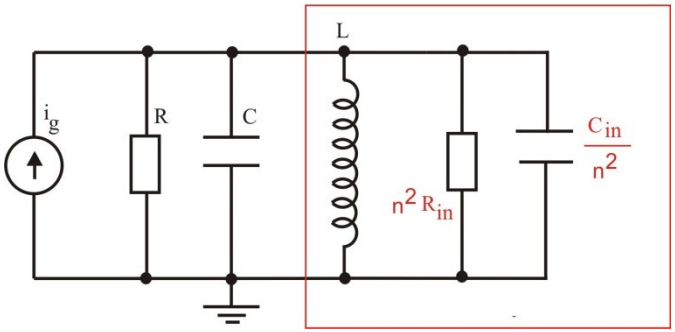

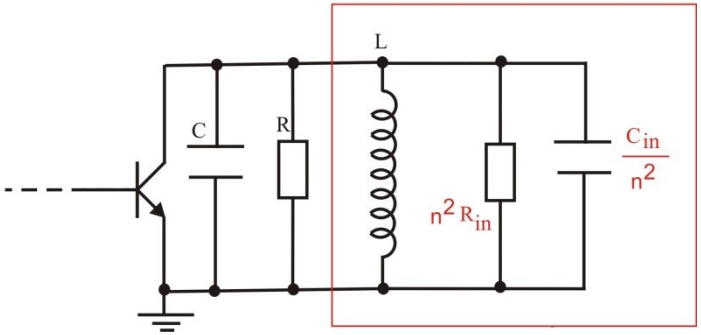

$$n = \frac{n_1 + n_2}{n_2} > 1$$

Sintonía Sincronizada
n Etapas de Sintonía Simple

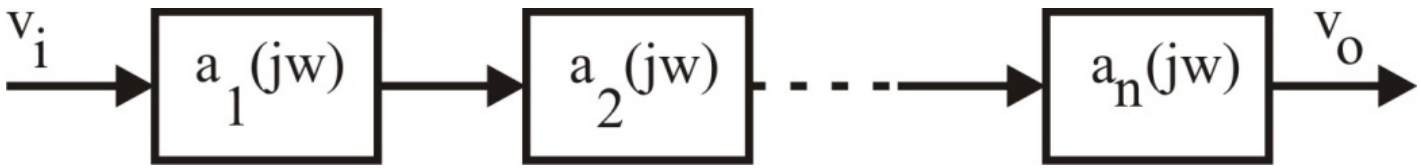

n Etapas idénticas (Q_0 y w_0 iguales)

$$a(jw_0) = a_1(jw_0)a_2(jw_0)\cdots a_n(jw_0)$$

$$a(jw) = \frac{v_0}{v_i}(jw) = \frac{a(jw_0)}{\left(1 + jQ_0\left(\frac{w}{w_0} + \frac{w_0}{w}\right)\right)^n}$$

Sintonía Sincronizada
n Etapas de Sintonía Simple

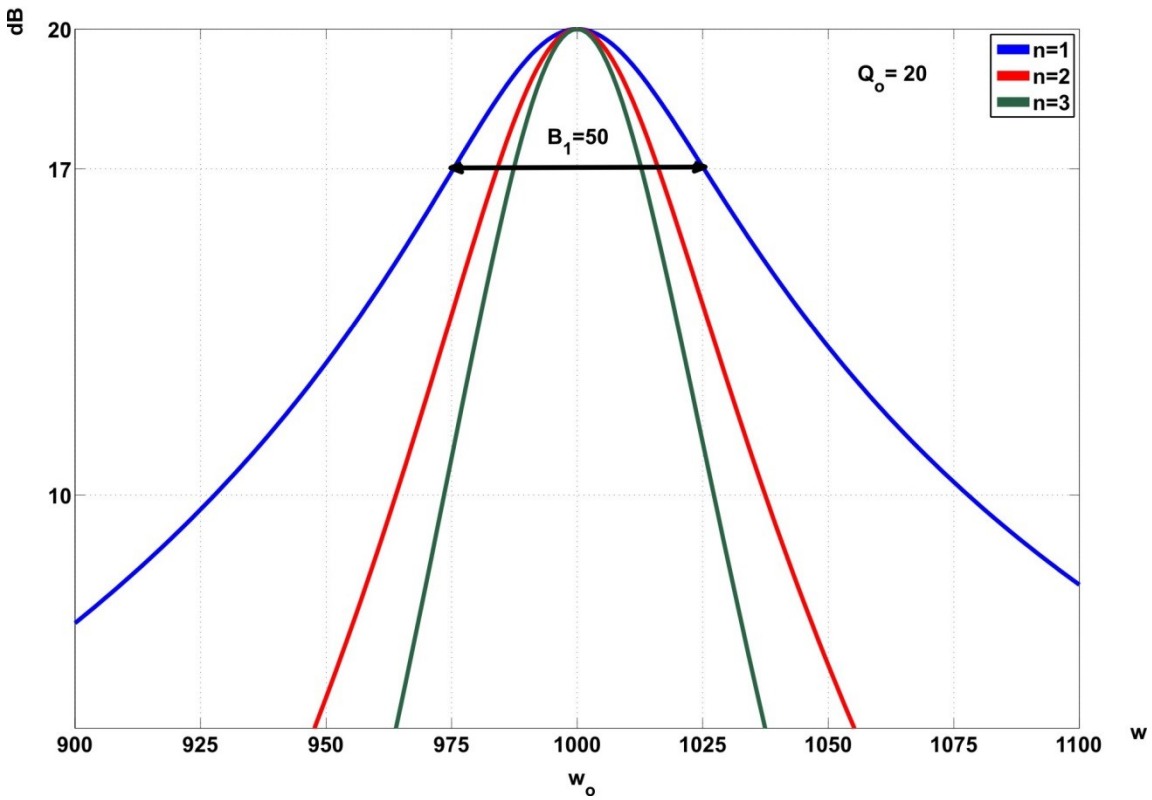

$$B_1 = \frac{w_0}{Q_0}$$

$$\boxed{B_n = B_1\sqrt{2^{\frac{1}{n}} - 1}}$$

$$B_2 = 0{,}6436B_1$$

$$B_3 = 0{,}5098B_1$$

Dos etapas de Sintonía Simple

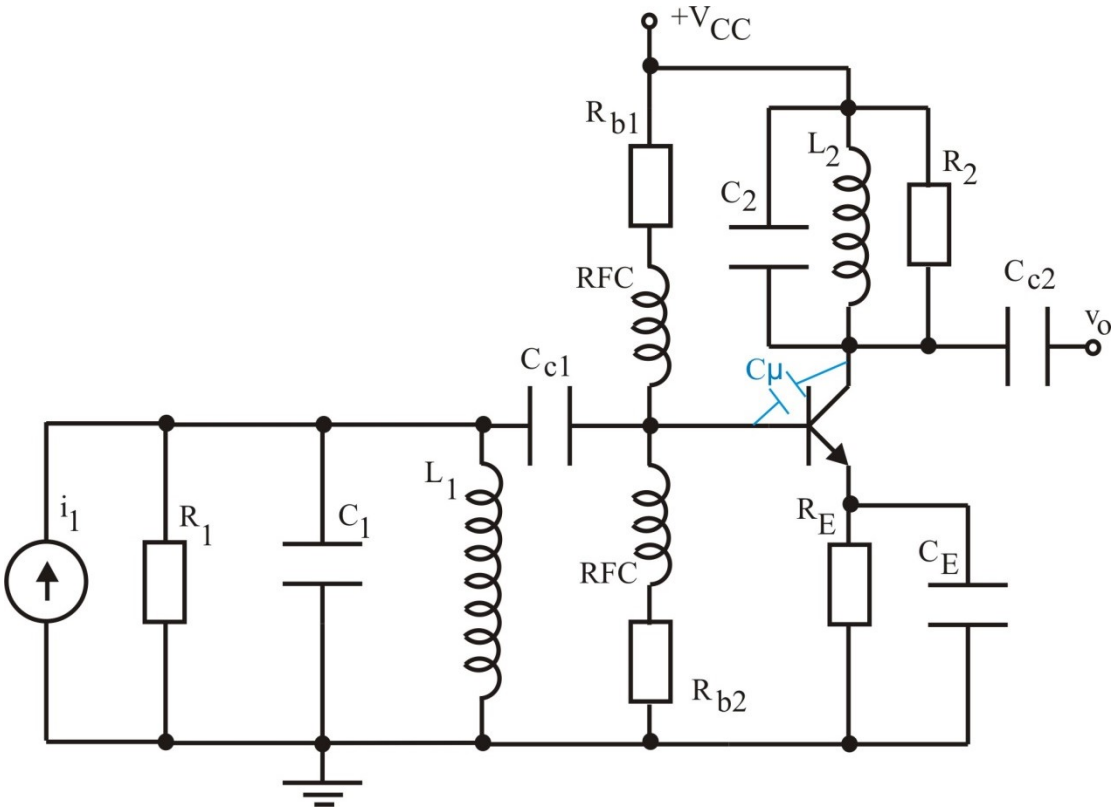

Dos etapas de Sintonía Simple

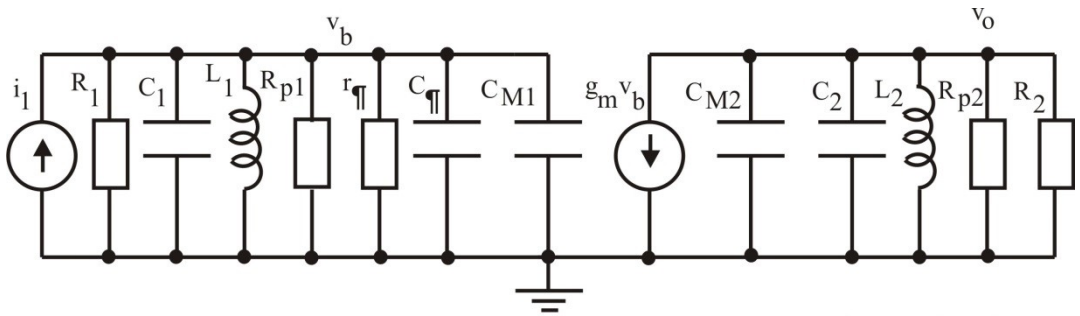

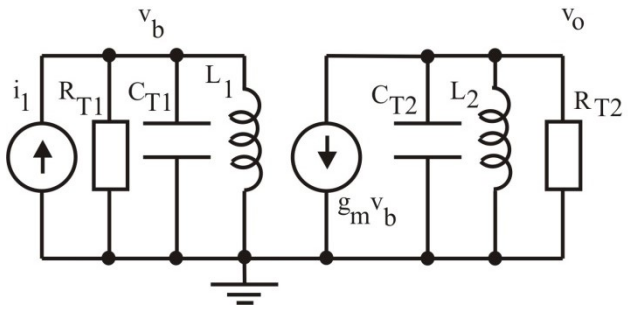

$C_{M1} = C\mu(1+g_m R_{T2})$

$C_{M2} \cong C\mu$

$R_{T1} = R_1 \| R_{p1} \| r_¶$

$R_{T2} = R_2 \| R_{p2}$

Se diseña:

$$w_0 = \frac{1}{\sqrt{L_1 C_{T1}}} = \frac{1}{\sqrt{L_2 C_{T2}}}$$

$$Q_0 = \frac{R_{T1}}{w_0 L_1} = \frac{R_{T2}}{w_0 L_2}$$

Se obtiene:

$$\frac{v_0}{i_1}(jw_0) = -g_m R_{T2} R_{T1}$$

$$\boxed{\frac{v_0}{i_1}(jw_0) = \frac{-g_m R_{T2} R_{T1}}{\left(1 + jQ_0\left(\frac{w}{w_0} - \frac{w_0}{w}\right)\right)^2}}$$

$$\boxed{B_T = 0{,}6436\frac{w_0}{Q_0}}$$

Dos etapas de Sintonía Simple. Cascodo

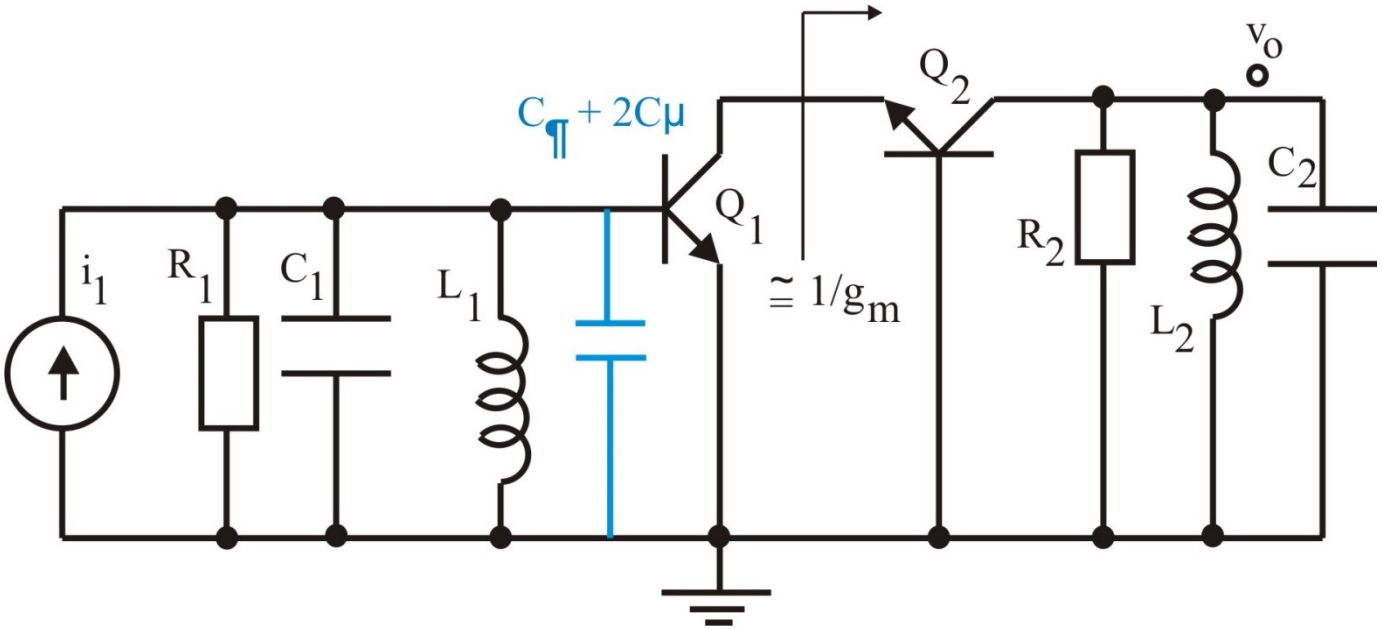
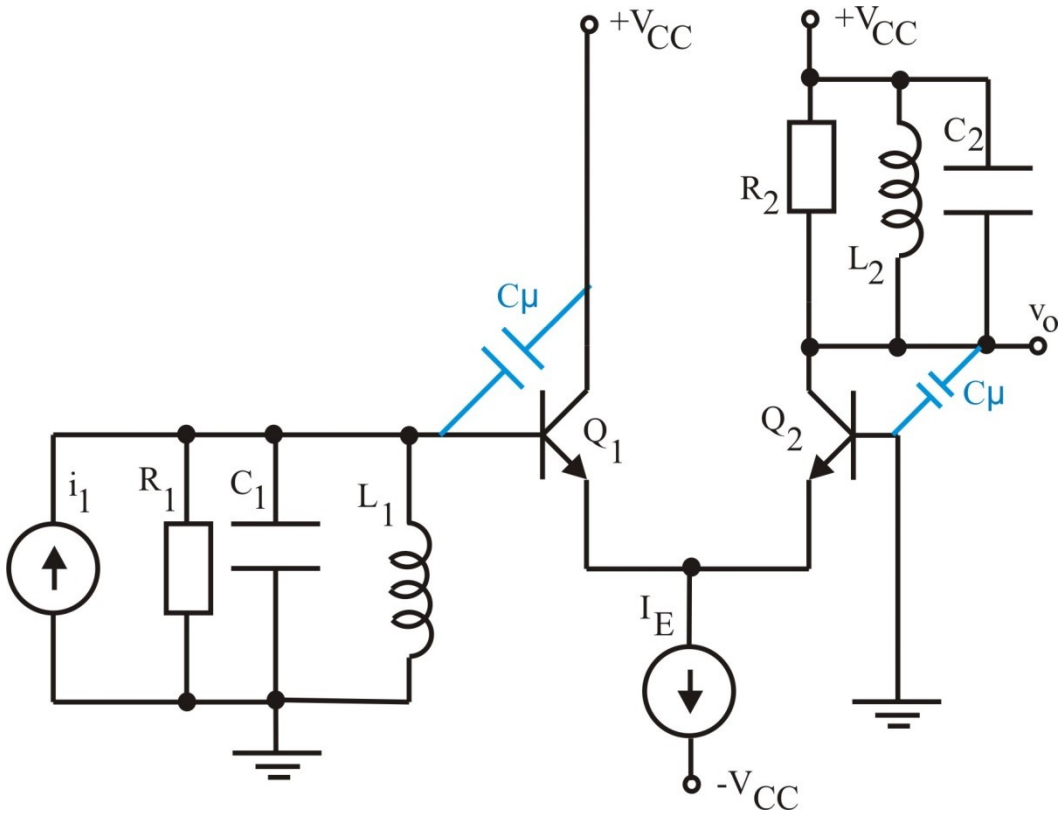
Dos etapas de Sintonía Simple. Cascada CC-BC